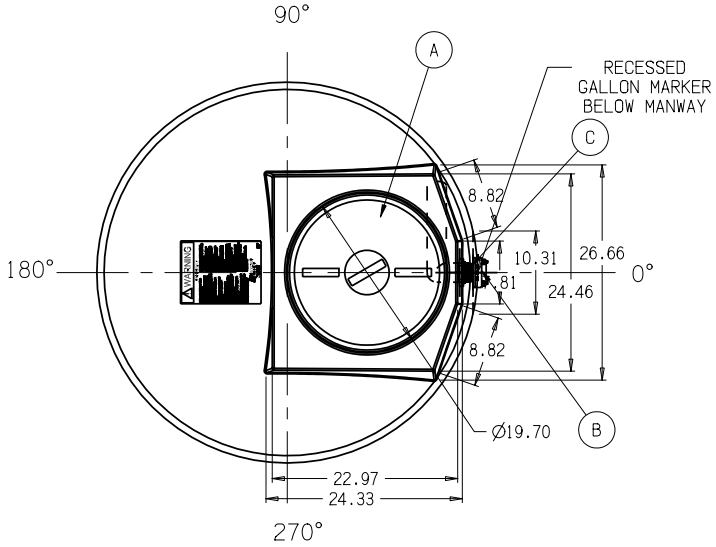

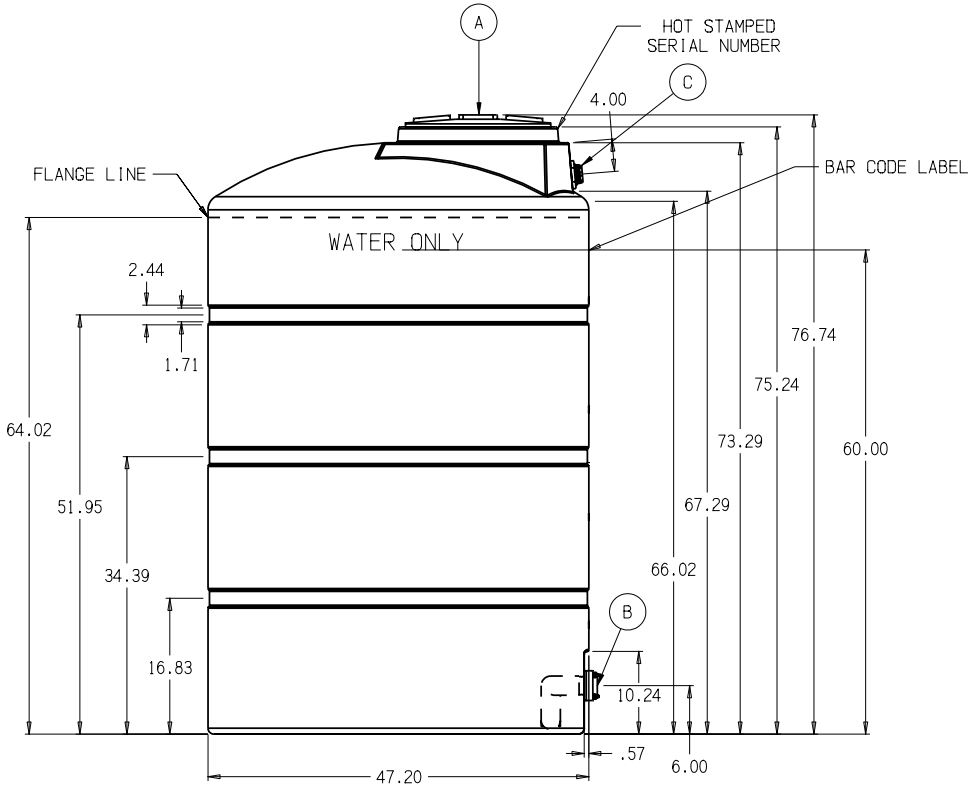

A. 18" PE THREADED-VENTED MANWAY W/15" ACCESS [P/N 34700087]
B. 2" PP DBL FLANGED BOLTED LONG SIPHON TUBE ASSY W/EPDM GASKETS & SS BOLTS [P/N 34700841]
C. 1-1/2" PP TxT BH BANJO FTG W/EPDM GASKET [P/N 34100144]

* BASE FITTINGS TO BE LEFT INSTALLED AT TIME OF SHIPMENT PER SII PROCEDURE
* Consult Snyder's Guidelines for Use and Installation prior to delivery.
  Available on-line at www.snydernet.com

(all dimensions in inches)

500 GALLON WATER STORAGE TANK [BLK & GDO]

PART # TANK: 1009600W942xx & 998xx

REF#: 0000

11/16/10

SNYDER INDUSTRIES INC.