REVISIONS				
ZONE	REV	DESCRIPTION	DATE	APPROVED

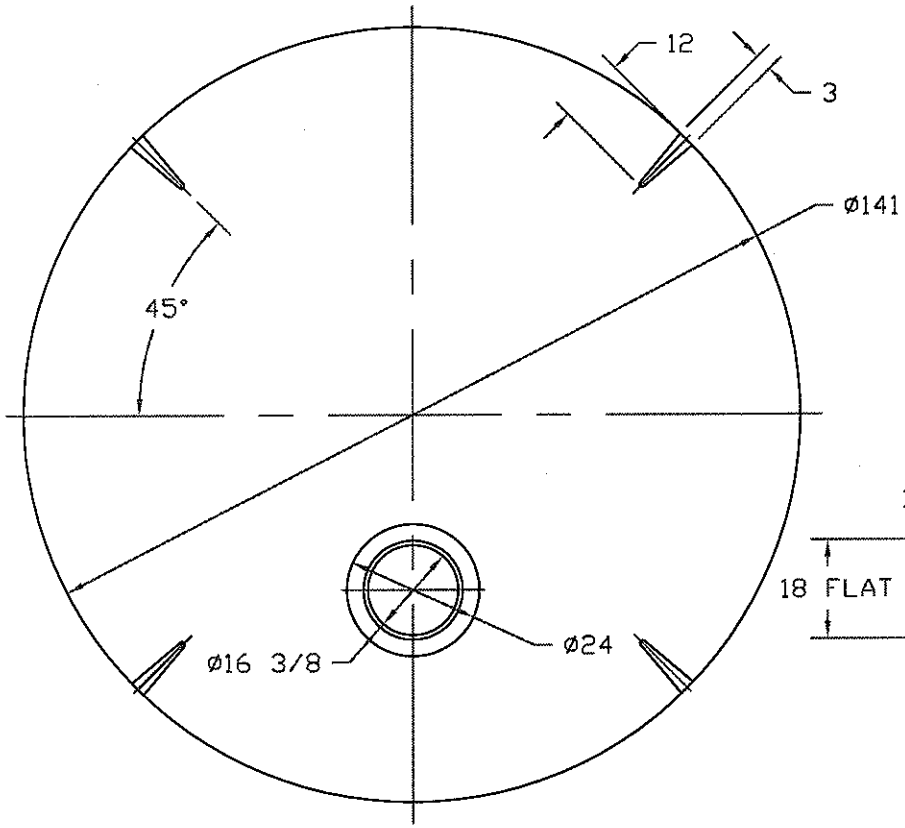

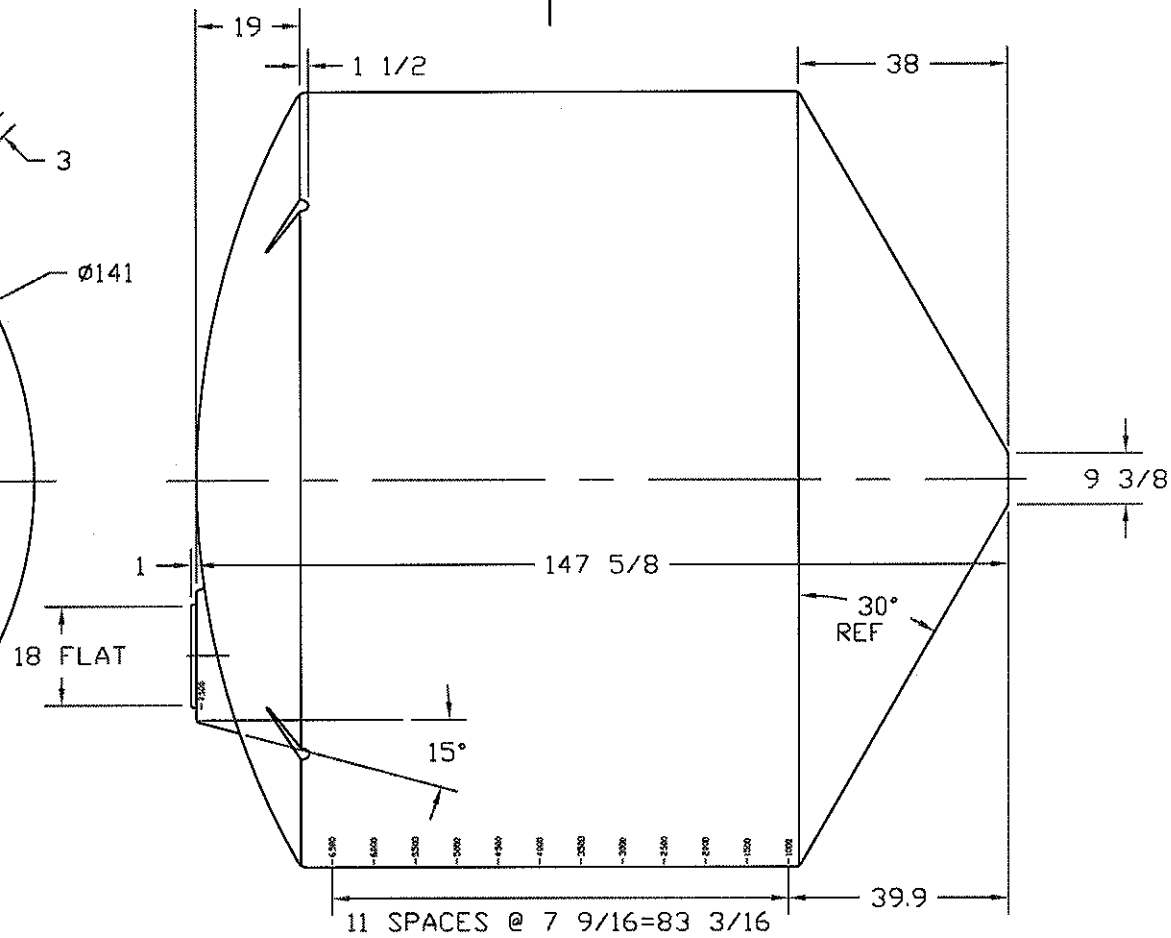

NORWESCO
ST. BONIFACIUS, MN

7500 GALLON CONE
BOTTOM TANK

JTP 27JAN97	SIZE B	FSCM NO.	DWG NO.	REV
	SCALE 1/24		SHEET	