SNYDER INDUSTRIES INC.

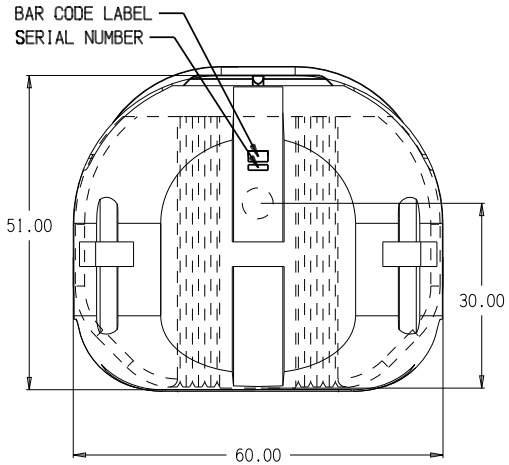

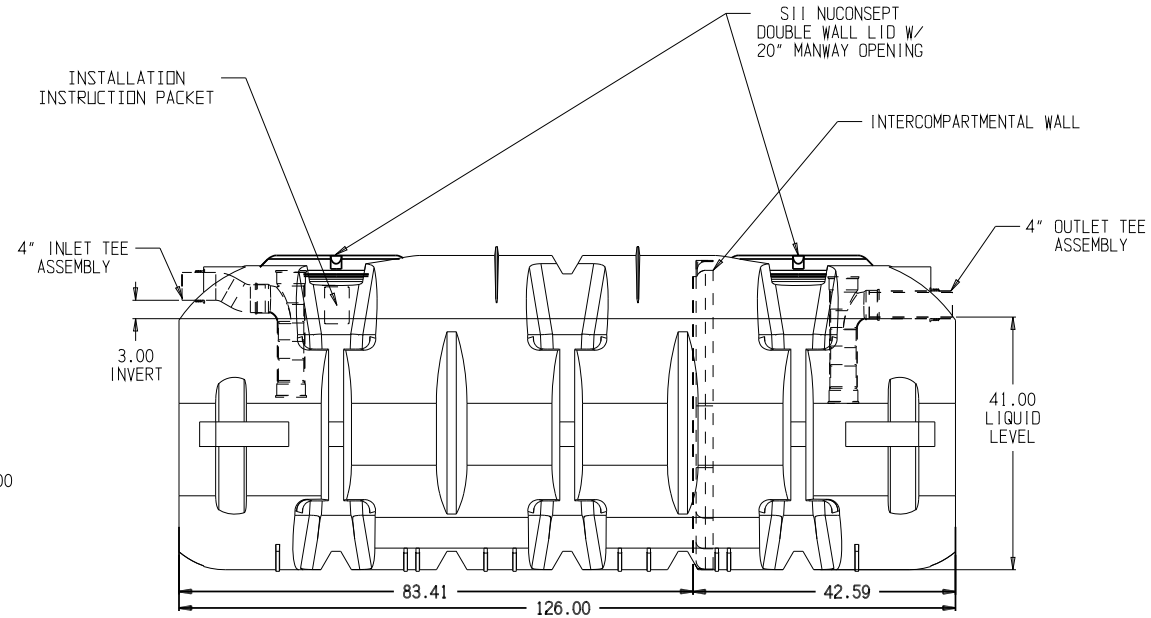

6" SEPTIC/CISTERN RISER BLACK [P/N 34300028] - OPTIONAL - NOT SHOWN
12" SEPTIC/CISTERN RISER BLACK [P/N 34300029] - OPTIONAL - NOT SHOWN
18" SEPTIC/CISTERN RISER BLACK [P/N 34300030] - OPTIONAL - NOT SHOWN

(all dimensions in inches)

1000 DOMINATOR SEPTIC DOUBLE COMPARTMENT - PLI

PART # TANK: 1001010W95314
HDPE/WGRY

REF#: 0000 06/05/09